Markwik 21 Sensor Operated Time Flow Hospital Thermostatic Tap

Product Code 6761SO

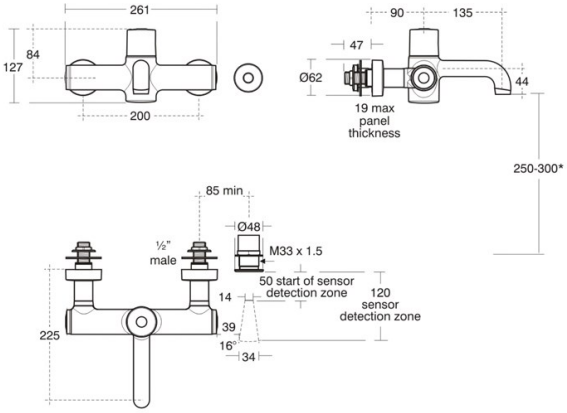

Armitage Shanks Markwik 21 Sensor Operated time flow hospital wall mounted thermostatic mixer tap.

Description:

The HTM64 TMV3 approved thermostatic hospital taps are purposely designed for use in hospitals healthcare and commercial applications. The sensor operation is activated by hand movement and is preset to run for 1 minute, but is adjustable making it ideal for use in scrub areas, consulting rooms, doctors surgeries or anywhere that hygiene is paramount. The taps offer the following:

- Wall mounted for through wall water supply.
- Sensor operated time flow control.
- Complies with HTM64 Type TB H6, HTM04, HFN30.
- Safe-touch surface temperature, guarding against burns.
- Integral flushing system assists legionella control.
- Easy access to serviceable parts, reducing down time.

WASHWARE ESSENTIALS LTD
Kestrel Court, Harbour Road, Portishead, Bristol BS20 7AN, Phone: 01275 390603
Web: www.washwareessentials.co.uk E-mail: enquiries@washwareessentials.co.uk