Washware Essentials
5 Brearley Court, Baird Road Waterwells Business Park Gloucester GL2 2AF
Phone: 01275 400456
Web: https://www.washwareessentials.co.uk
Email: enquiries@washwareessentials.co.uk

Accessible Drinking Fountain With Bottle Filler - (Non Chilled)



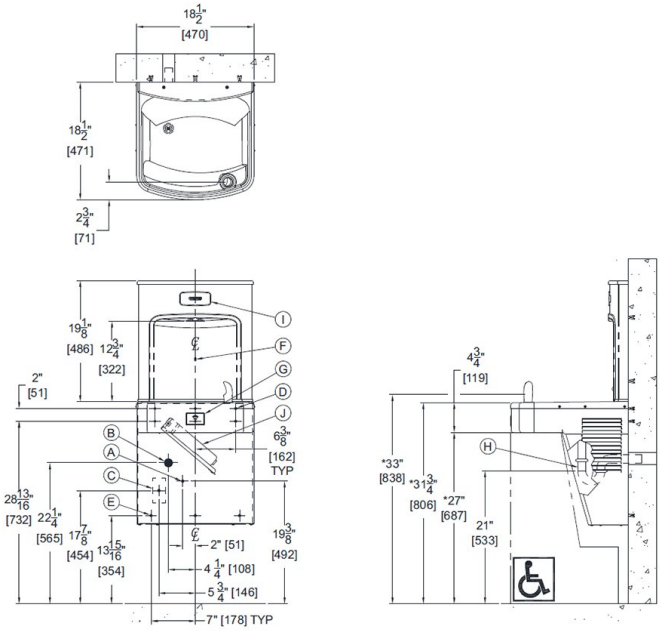

Product Code: ACC-DFBF

Accessible Drinking Fountain With Sensor Bottle Filler (non chilled)

Product Code: ACC-DFBF

The ACC-DFBF wall-mounted DDA accessible non chilled drinking fountain and bottle filler is a robust, commercial-grade hydration station engineered for education, fitness, and workplace environments. Manufactured from premium grade 304 stainless steel, it offers exceptional durability, easy cleaning and long service life. This non chilled version offers a cost saving over our chilled water versions.

This combined model features an overhead, sensor-operated bottle filling module, positioned directly above the drinking fountain. The automatic bottle filler delivers fast, touch-free operation and uses the mains water supply for safe, refreshing hydration with minimal user contact.

Designed to support wheelchair users as well as standing users, the unit meets modern accessibility requirements while providing a practical, efficient and hygienic drinking solution for both point of use drinking fountain water and re-useable water bottle refilling.

Key Features & Advantages

- DDA-compliant layout, ensuring comfortable access for wheelchair users and able-bodied individuals.
- Brushed 304 stainless steel construction for strength, corrosion resistance and easy maintenance.
- Touch-free bottle filling station mounted above the cooler, activated by an infrared sensor for hygienic, hands-free use.
- Stainless steel backsplash to bottle filler.
- 3.79 litre per minute bottle filling rate.
- Anti-microbial push-button bubbler control for standard drinking fountain use.
- Reliable mains-fed design, ensuring continuous supply without the need for bottle changes.
- **Please note this is a non chilled water version using unchilled mains water.**

Supplied With

- Anti-microbial bubbler valve with flexible, non-splash guard.
- Pre-installed plumbing including Y-strainer and flow regulator.
- 32mm waste outlet connection.
- Pre-wired transformer for bottle filling unit.

Best Suited For

- This accessible chilled water station with bottle filler is ideal for:
- Schools, colleges and universities
- Gyms, fitness centres and leisure facilities
- Industrial premises including factories and warehouses
- Offices and commercial buildings
- Any indoor area requiring inclusive, high-traffic hydration points

Dimensions

- Height: 971mm including bottle filler.
- Width: 470mm.
- Depth: 470mm.

Fast Delivery

In stock for quick dispatch.

Standard delivery: 1 to 3 working days.

Alternative Modes

- Non chilled drinking fountain without bottle filler.
- Chilled water drinking fountain without bottle filler.
- Chilled water drinking fountain with sensor operated bottle filler.

**All pictures shown are for illustration purpose only and may be subject to change without notice. Actual product may vary due to product enhancement.
All dimensions shown are for guidance only and may be subject to change or alteration without notice. All items manufactured or purchased separately from a third party to fit our products should be checked against the actual dimensions of the physical product before purchase. We will not be liable for third party costs and consequential loss associated with the items not fitting third party components.**