Washware Essentials
Kestrel Court Harbour Road Portishead Bristol BS20 7AN
Phone: 01275 400456
Web: https://www.washwareessentials.co.uk
Email: enquiries@washwareessentials.co.uk

Adult Height Drinking Fountain With Bottle Filler Spout

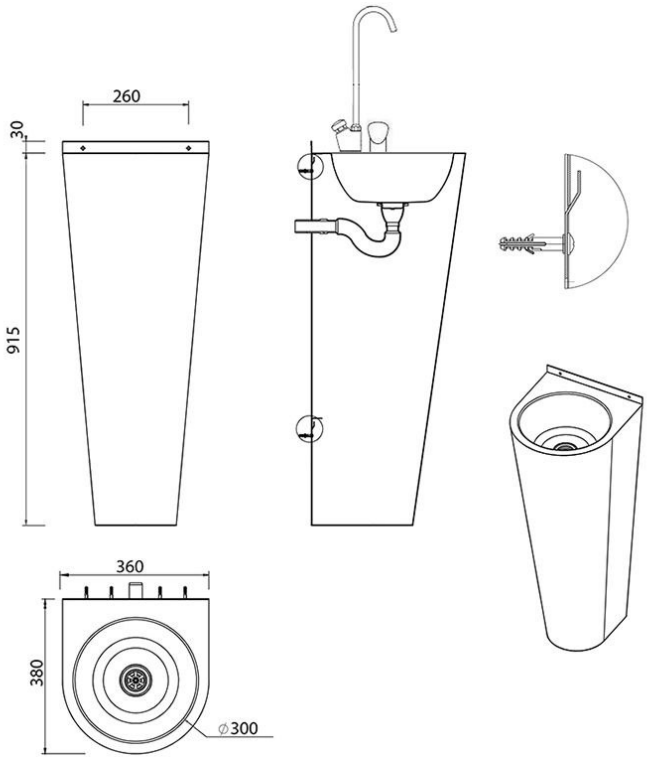

Product Code: FSDB-A

Stainless Steel Adult Height Drinking Water Fountain With Bottle Filler

Product Code FSDB-A

Stainless steel floor standing adult height drinking fountain with an added swan neck bottle filling spout. Point of use drinking water with the option to refill re-useable drinking water bottles. The rounded front provides safety for users whilst the full height shroud allows for the water pipes to be concealed.

- Floor standing adult height drinking water fountain with bubbler and bottle filling tap.
- Stainless steel grade 304 construction.
- Adult height 915mm.
- Fixed under shroud to conceal pipework.
- Rounded front design for safety.
- Complete with standard WRAS approved press button drinking water tap.
- Complete with standard WRAS approved press button bottle filling tap.
- Supplied with fixing brackets, 32mm waste fitting and flexible waste pipe.
- Recommended for many applications including Schools.
- Please ensure that these are drained down and isolated in cold weather to avoid damage to the bubbler.
- Also available with drinking water tap or with a bottle filling tap.
- To ensure the proper functioning and longevity of this unit, a Y-strainer must be installed as part of the water supply system. The Y-strainer is essential for protecting the internal components and maintaining the correct flow characteristics of the tap. Failure to install a Y-strainer will result in the warranty being void.

Size

- 380mm front to back.
- 360mm wide.
- 915mm high plus 30mm upstand.

Delivery

- From stock usually 1 to 2 working days.

Optional Extras

- 32mm plastic bottle trap.

**All pictures shown are for illustration purpose only and may be subject to change without notice. Actual product may vary due to product enhancement.
All dimensions shown are for guidance only and may be subject to change or alteration without notice. All items manufactured or purchased separately from a third party to fit our products should be checked against the actual dimensions of the physical product before purchase. We will not be liable for third party costs and consequential loss associated with the items not fitting third party components.**